Watering Can

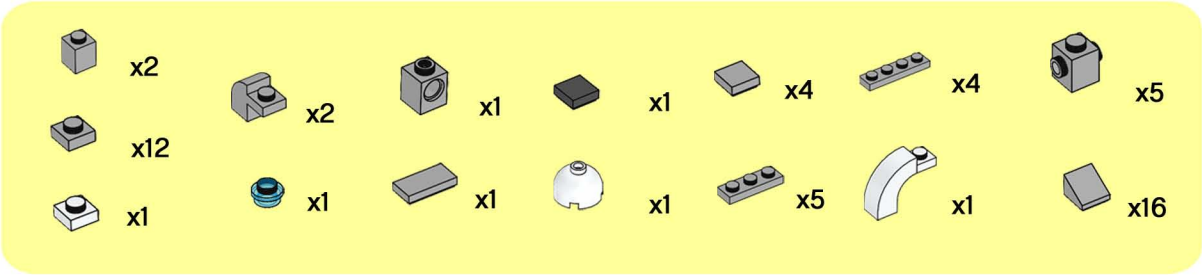

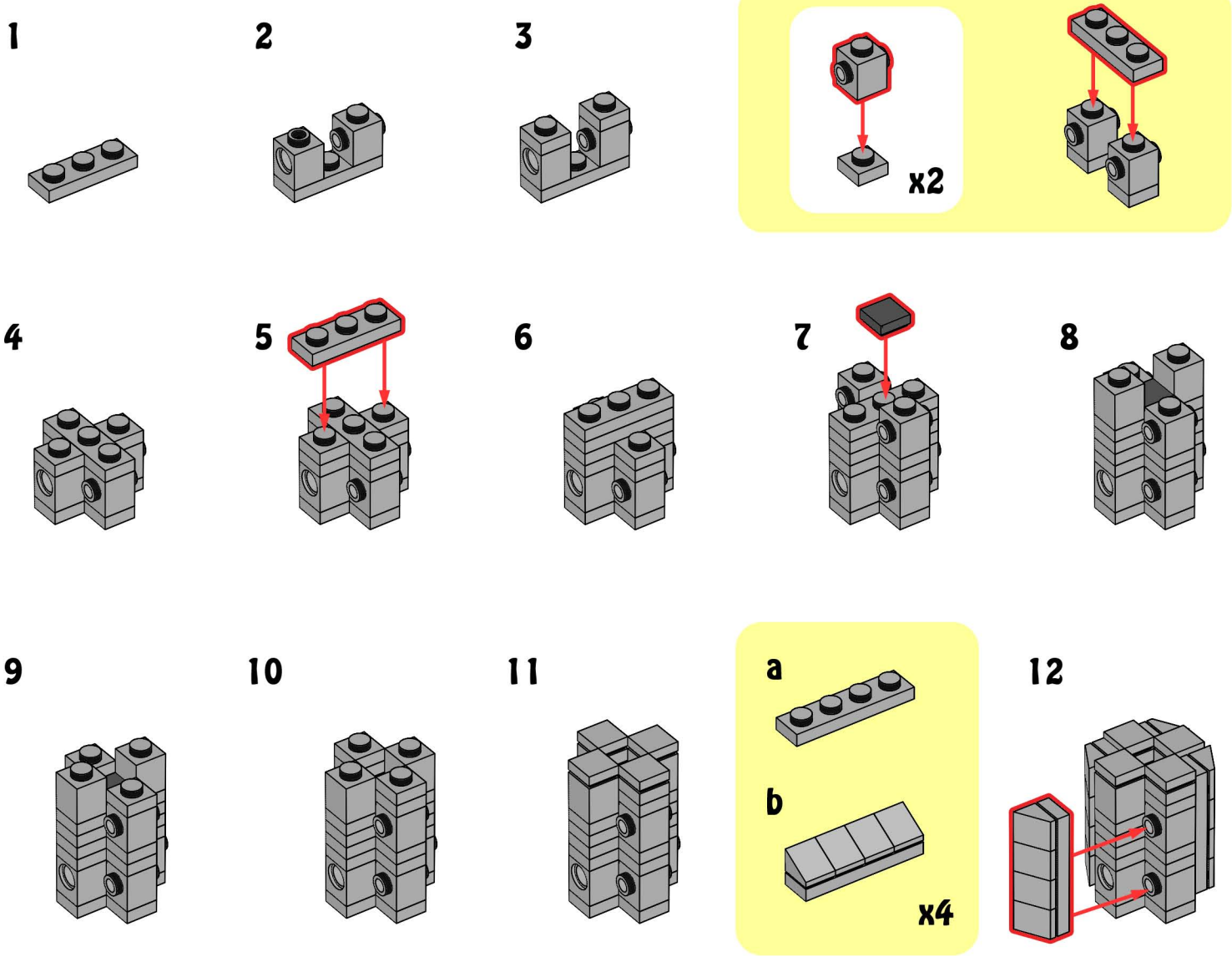

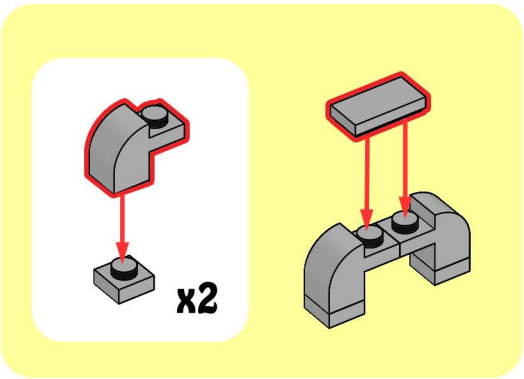

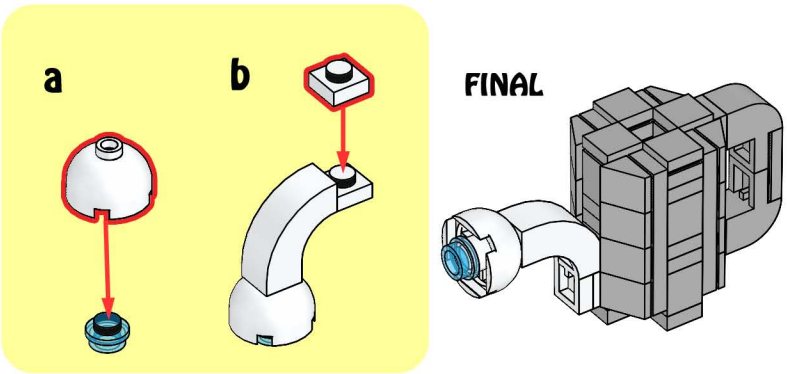

LEGO, and the LEGO logo are trademarks of the LEGO Group.
© 2011 The LEGO Group.